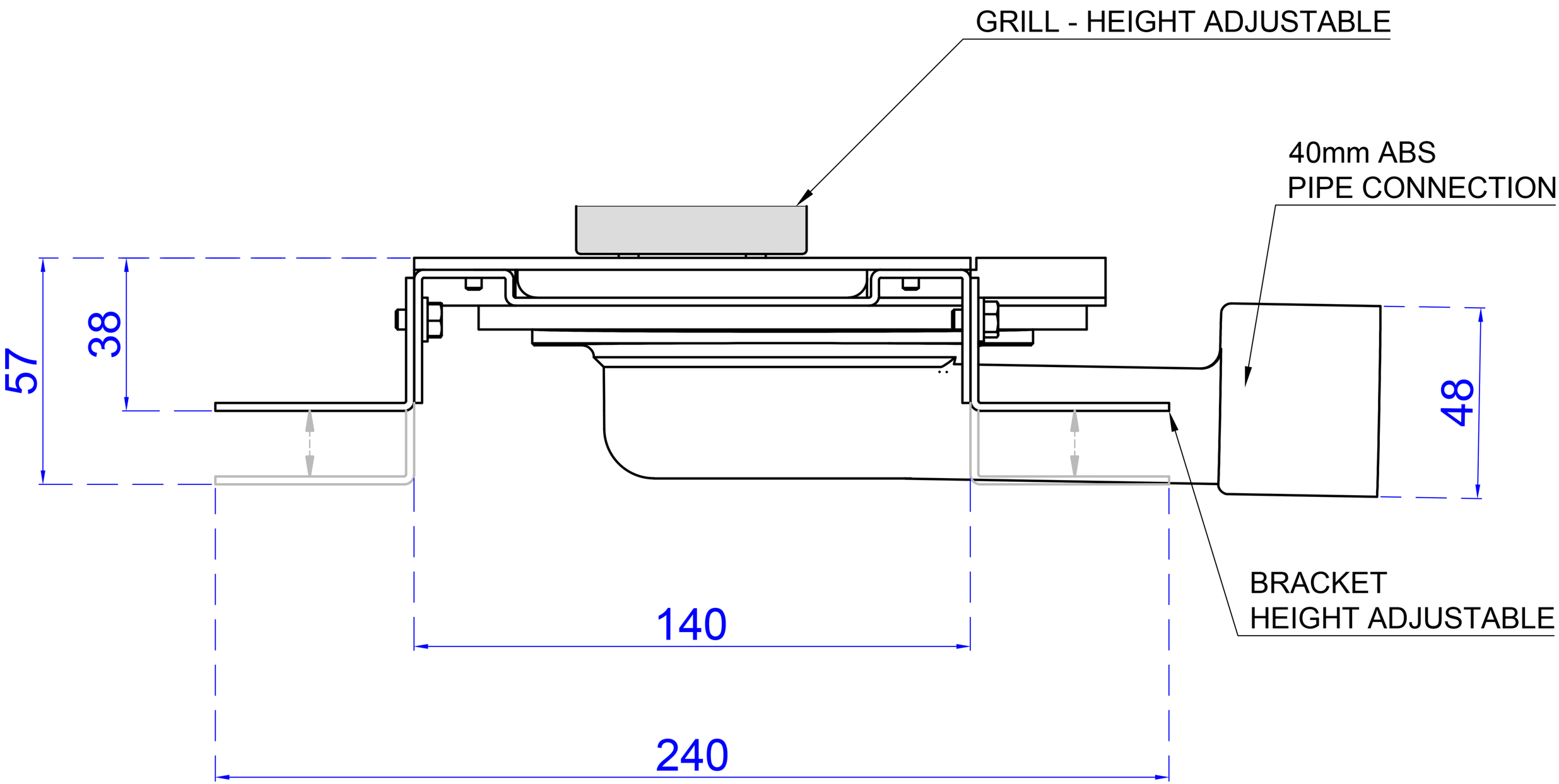
GRILL - HEIGHT ADJUSTABLE
40mm ABS
PIPE CONNECTION
57
38
48
140
240
BRACKET
HEIGHT ADJUSTABLE